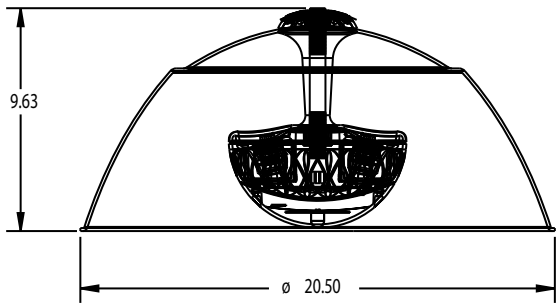

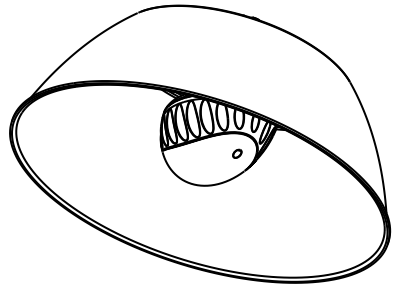

DIMENSIONS ARE IN MILLIMETERS
UNLESS OTHERWISE SPECIFIED
TOLERANCES:
FRACTIONAL ± 1/10mm
ANGULAR: ± 0.5
ZERO PLACE DECIMAL ± .8mm
ONE PLACE DECIMAL ± .3mm

MATERIAL

FINISH

DO NOT SCALE DRAWING

	NAME	DATE
DRAWN	SM	4/27/05
CHECKED		

COMMENTS

PROPRIETARY AND CONFIDENTIAL
THE INFORMATION CONTAINED IN THIS DRAWING IS THE SOLE PROPERITY OF SOUNDTUBE ENTERTAINMENT. ANY REPRODUCTION IN PART OR AS A WHOLE WITHOUT THE WRITTEN PERMISSION OF SOUNDTUBE ENTERTAINMENT IS PROHIBITED.

Park City, Utah 84098 USA 1-435-647-9555

PART NAME
FP6020

SIZE B | PART NO. | REV

SCALE: 1:8 | WEIGHT: | SHEET 1 OF 1