Technical Information

No. DO 5650

Edition: 01/08 - subject to change

Supersedes:
Status: valid

OSRAM CLASSIC

Metal Halide Lamp

EMH 575 W/DE/60

Product description

The OSRAM CLASSIC EMH 575 W/DE/60 is a double-ended metal halide lamp. Due to its very short arc length a high luminance and efficacy is achieved. The EMH 575 W/DE/60 is designed for hot restart.

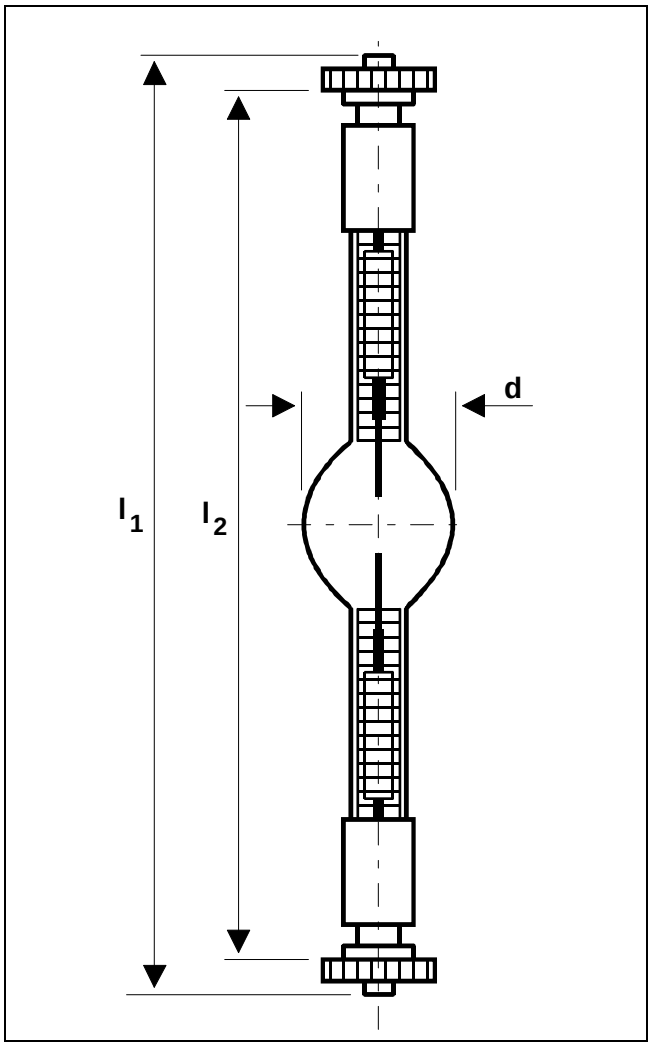

Technical data

Lamp / order reference		EMH 575 W/DE/60
Rated lamp wattage	W	575
Lamp voltage	V	95
Ignition voltage (cold, kHz ign.)	kV	4.5
Ignition voltage MHz (cold / hot)	kV_s	7 / 20 (max. 25 *)
Ignition voltage kHz	kV_s	4,5
Lamp current (~)	A	7
Luminous flux	lm	42,000
Luminous efficacy	lm/W	85
Color temperature	K	6,000
Electrode gap e (cold)	mm	7
Lamp length l_1 (over all)	mm	max. 135
Lamp length l_2	mm	115
Bulb diameter d (incl. pumping tip)	mm	24
Average service life	h	750
Base		SFc10-4

* maximum peak value of surge voltage

Lamp operation

Maximum permissible pinch seal temperature	°C	230
Cooling		Convection
Burning position		any

The EMH 575 W/DE/60 can either be operated on standard ballasts or on electronic power supplies (ECG).

Manufacturers of igniters and control gear (not all officially approved by OSRAM)

Ignitors: BAG MZN 10.005; Bauch 250K; Hansmann ZG 500 PRO and ZG 501 PRO; Mitronic ZGV 40-11

Ballasts: May & Christe Typ HMI 575 W; BAG 230BK575; Vossloh Schwabe J575.400; irem BE-575; Sachtler Ballast 575

ECGs: LEJ ebm 575; Mitronic PE 400-575, CE 50-575, PFPE60 Line; Sachtler Netronic 575; Hansmann ER 575 and EFR 575; Schiederwerk 400/575, 575/700

Further information on operating and control device requirements is available with the OSRAM brochure "Guidelines for Control Gear and Igniters - Metal Halide Lamps Photo Optics", order reference 123T01E.