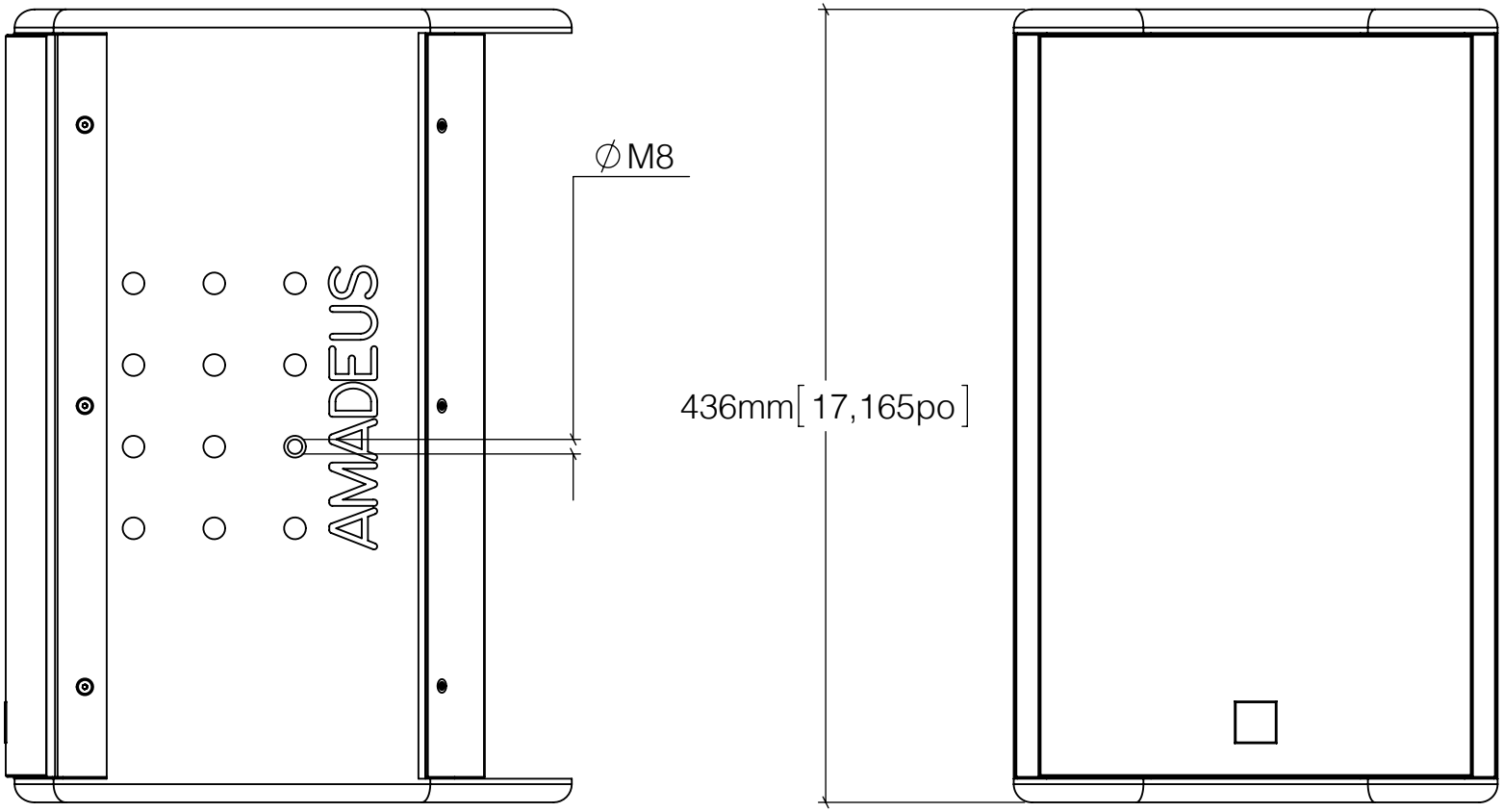

Amadeus is a registered trademark of Atelier 33. All rights reserved.
18 Rue Marc Seguin 77290 Compans (France)
Main : 00 33 (1) 64 67 02 47 - Fax : 00 33 (1) 64 67 20 00 - E-mail : info@amadeusaudio.fr - Website : www.amadeusaudio.fr

Project :	Drawn by : AMADEUS	
Material :	Name : PMX 8 D	Sheet 1 of 3
Weight :	Scale 1:4	Date : 12/03/2018

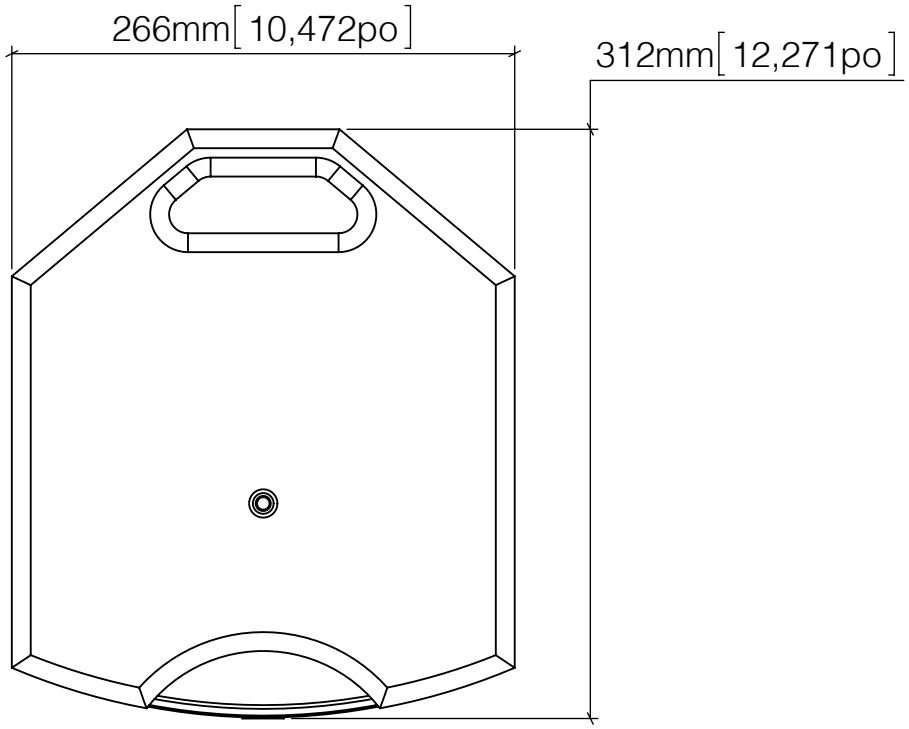

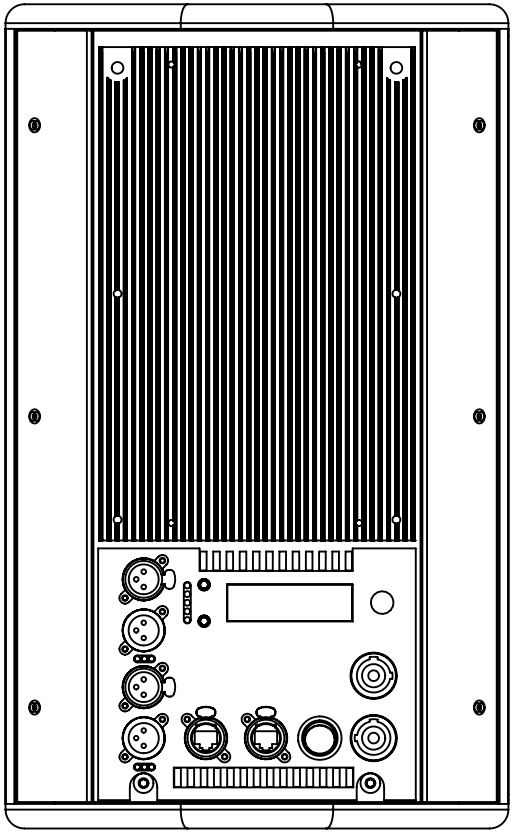

AMADEUS

Amadeus is a registered trademark of Atelier 33. All rights reserved.
18 Rue Marc Seguin 77290 Compans (France)
Main : 00 33 (1) 64 67 02 47 - Fax : 00 33 (1) 64 67 20 00 - E-mail : info@amadeusaudio.fr - Website : www.amadeusaudio.fr

Project :	Drawn by : AMADEUS	
Material :	Name : PMX 8 D	Sheet 2 of 3
Weight :	Scale 1:4	Date : 12/03/2018

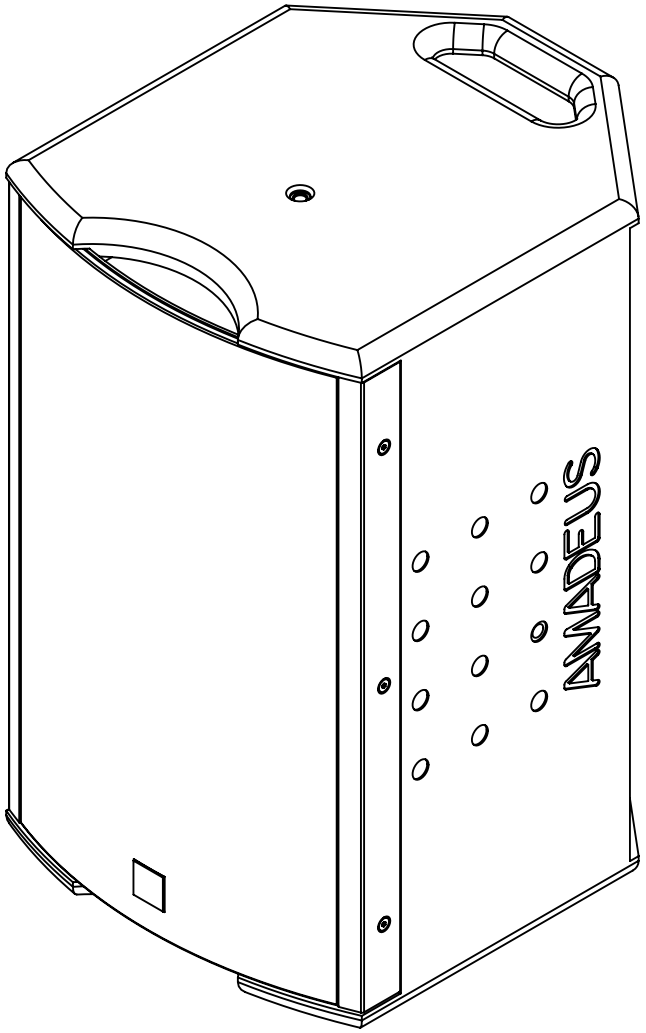

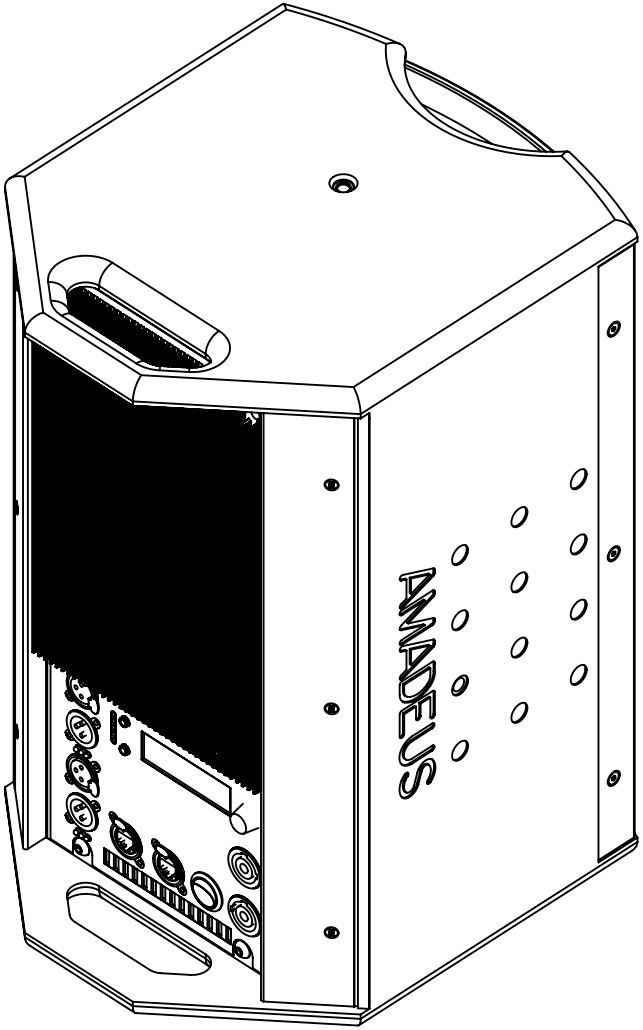

AMADEUS

Amadeus is a registered trademark of Atelier 33. All rights reserved.
18 Rue Marc Seguin 77290 Compans (France)
Main : 00 33 (1) 64 67 02 47 - Fax : 00 33 (1) 64 67 20 00 - E-mail : info@amadeusaudio.fr - Website : www.amadeusaudio.fr

Project :	Drawn by : AMADEUS	
Material :	Name : PMX 8 D	Sheet 3 of 3
Weight :	Scale 1:4	Date : 12/03/2018